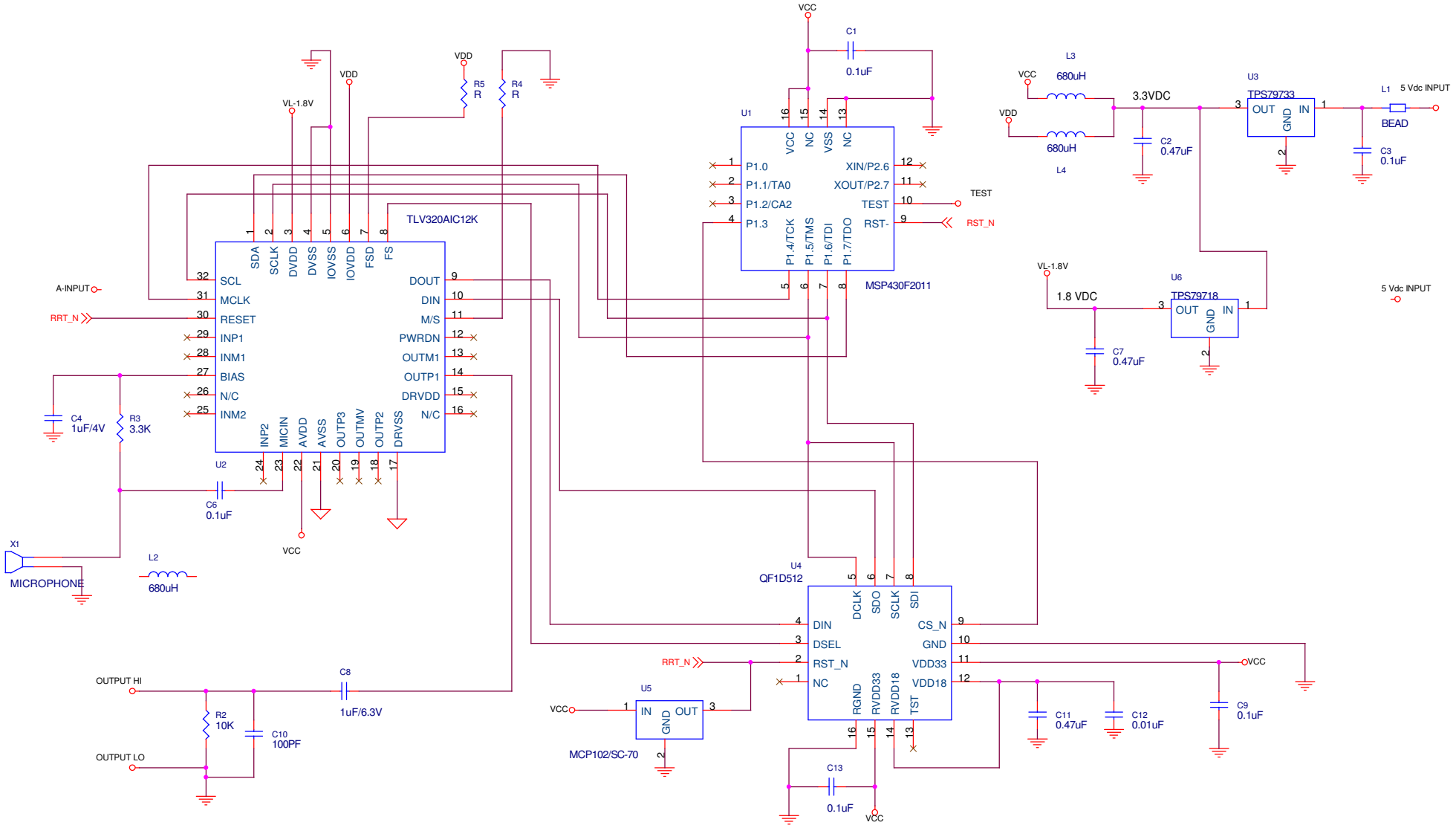

Quickfilter Technologies

Title
Digital Microphone

Document Number
Reference Design

Rev
A

Date: Wednesday, October 24, 2007 Sheet 1 of 1