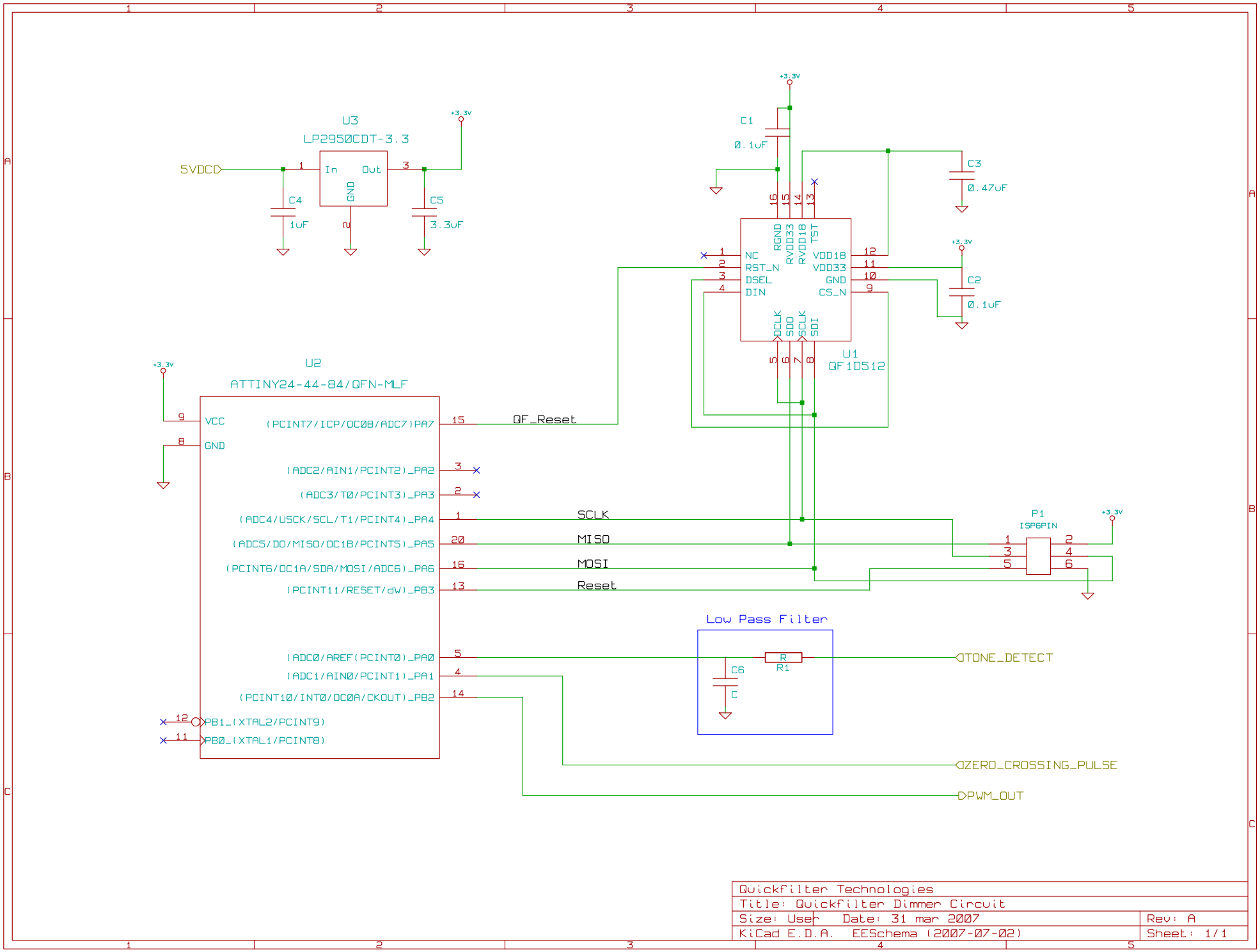

Quickfilter Technologies	
Title: Quickfilter Dimmer Circuit	
Size: User Date: 31 mar 2007	Rev: A
KiCad E.D.A. EESchema (2007-07-02)	Sheet: 1/1